ORTAL
YOUR LIFE. YOUR FIRE

Wilderness RS68 Screen

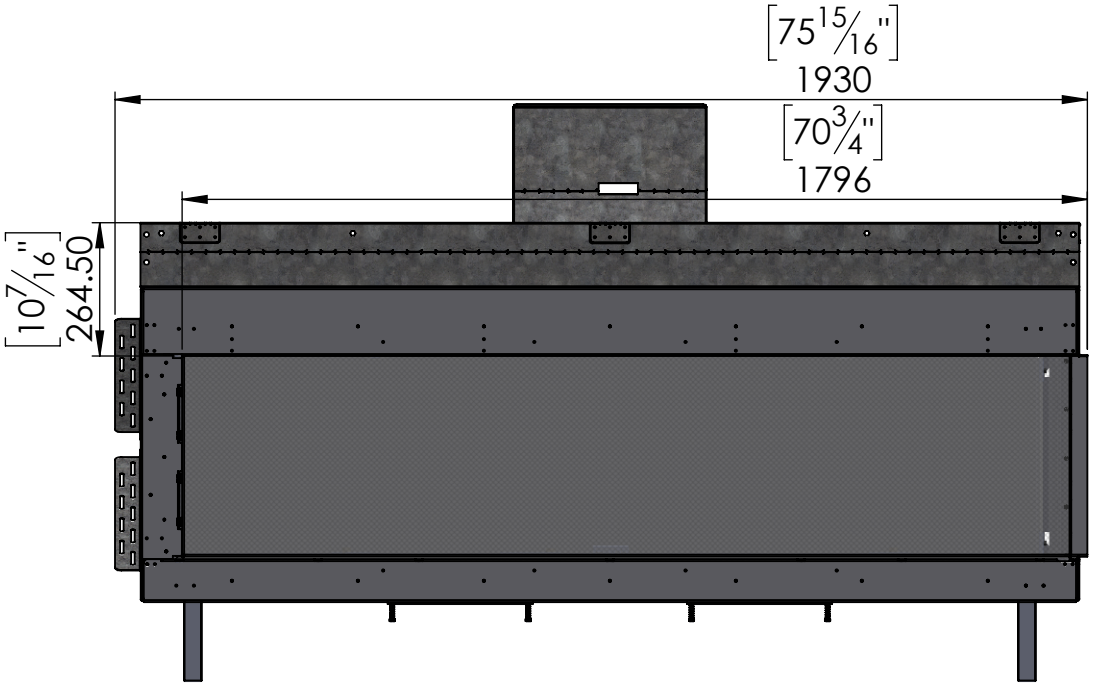

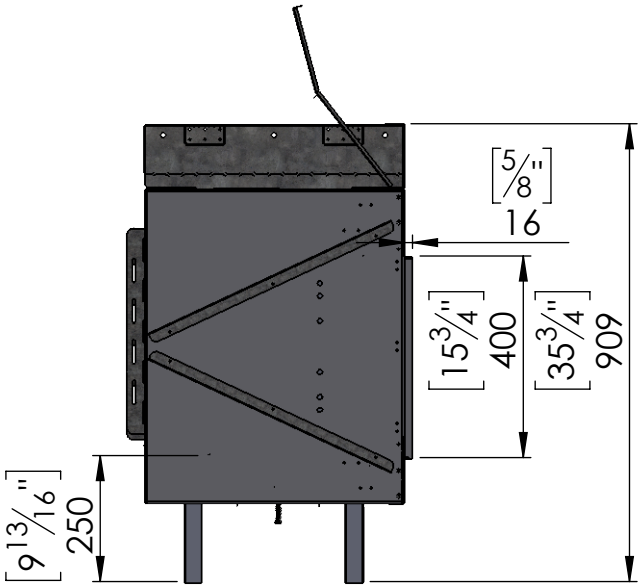

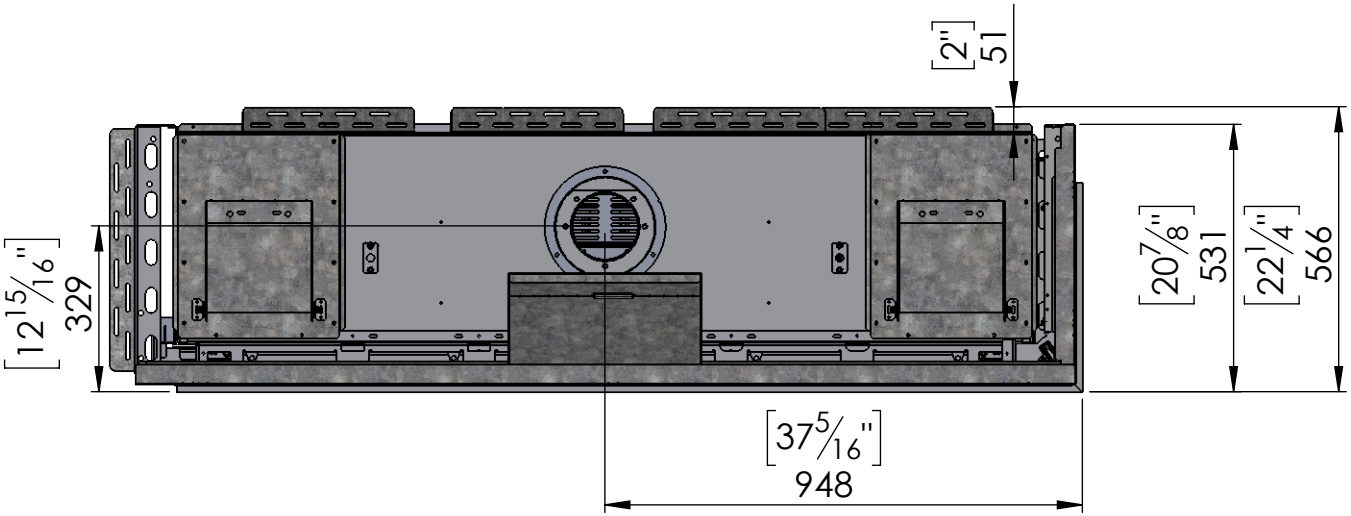

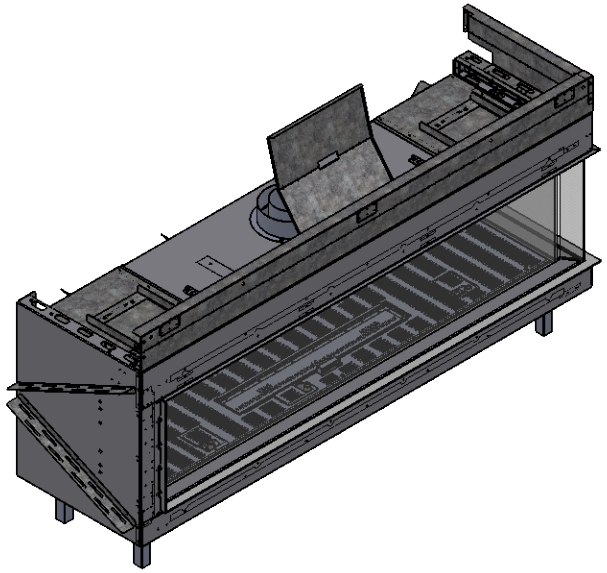

9/9/2021